SHARP

LM40X21A

Character Type LCD Module
(FA/POS/Measuring instruments)

Features

- 40 characters x 2 lines
- 5 x 7 dots with cursor
- STN LCD (Transmissive)
- Suitable for telephone & facsimile etc.,

Specifications

Parameter		Unit
No. of characters	40 x 2	-
Character size(H x V)	3.2 x 4.85	mm
Viewing area (H x V)	154.4 x 15.8	mm
Panel type	STN	-
Panel mode	Transmissive	-
Viewing direction	Normal view	-
Backlight type	LED	-
Backlight color	Yellow-green	-

Parameter		Unit
Power consumption	1 512	mW
Supply voltage	5	(V)
Outline dimensions (W x H x D)	182.0 x 33.5 x 16.0	mm
Weight	90	g
Operating temperature	0 to +50	°C
Storage temperature	-25 to +70	°C

Outline Dimensions
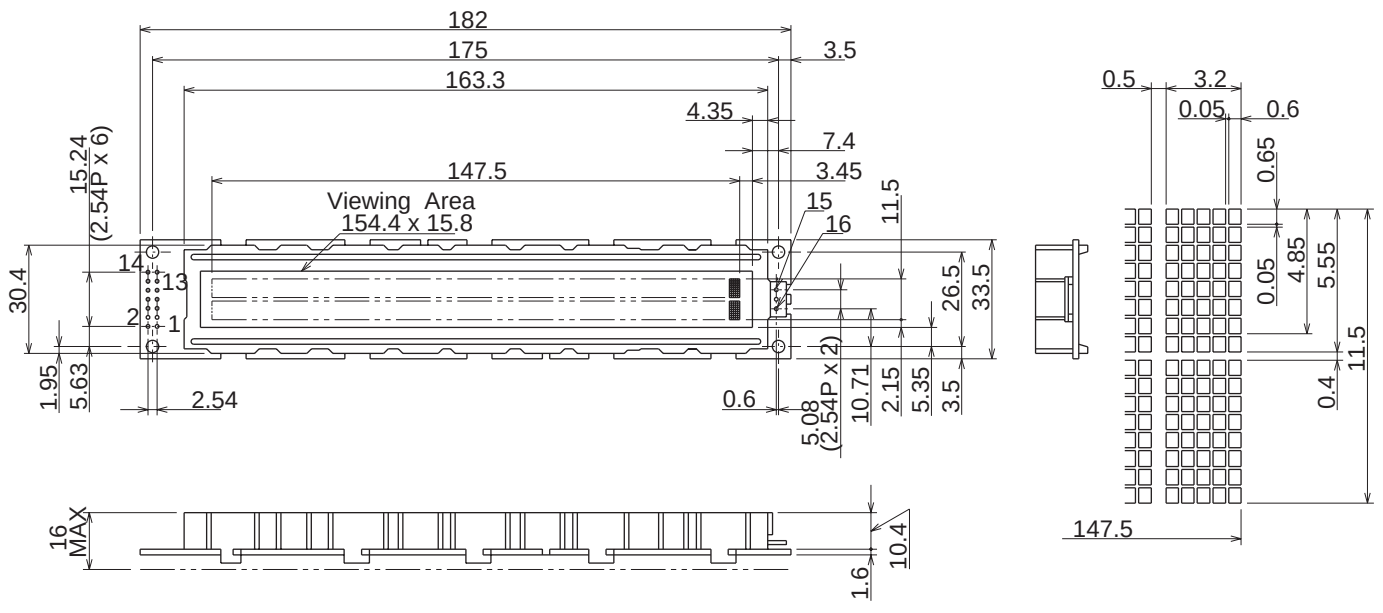
unit : mm