speed

perfect scalability

Blade Server

delivering maximized service with optimum resources

easy to manage

ultra dense

Phoenix Blade Server 318 Series

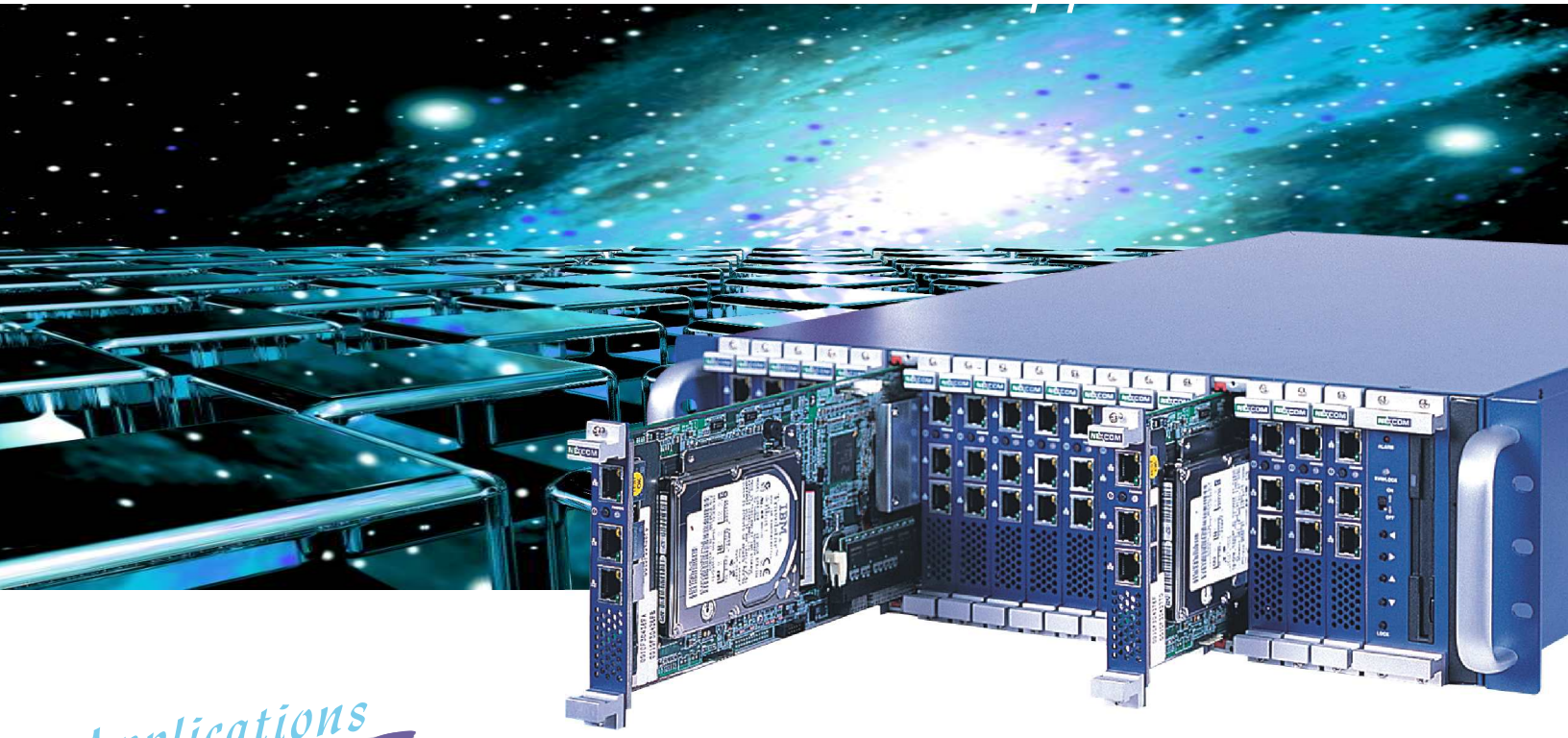

Applications

- Web Hosting Servers
- Enterprise Application Servers
- Performance Computing Clusters
- 3D-Rendering Farms
- Windows Terminal Servers
- Streaming Media Servers

Intel® Applied Computing Platform Provider

2001 Communications Solutions Product Of The Year

Phoenix Blade Server 318 Series

- GigaHz throughput
- Dual Gigabit LAN
- Flexibility for Expansion & Upgrade

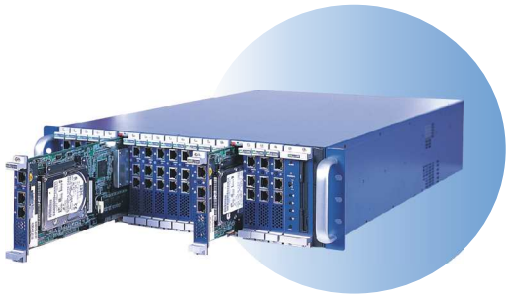

Benefits

A New Generation High Performance Platform

Phoenix Blade Server 318 systems accommodate up to 18 server blades within one 3U chassis. That means a 42U tall computer rack can contain over 250 servers. By installing server blades with Gigahertz CPU and Gigabit LAN chips, the whole rack can draw out more than 316GHz of aggregated computing power and 588Gbps of aggregated network throughput. It is ideally suited for today's intensive computing and communication applications. Phoenix Blade Server 318 is not only superior in terms of overall performance, but it also performs excellently in terms of power consumption, each server blade consuming less than 50 watts.

Quick Deployment and Maintenance through Hot-Swap and unique KVM and Daisy Chain Features

All field service units of the Phoenix Blade Server 318 are hot-swappable, including Server blade, KVM blade, power modules, and fan modules. Users can install server blades in the Phoenix Blade Server very easily via "plug and play". The hot-swap feature also enables fast and easy system maintenance. Whenever there is a failure in any of its parts, users may just take out the failing part and replace it with a workable one without having to shut down the whole Phoenix Blade Server system.
The unique KVM and CF design permits all those server blades within one chassis to share a single set of keyboard, video, mouse, CD-ROM and floppy drives, witch makes on-site service more efficient and beneficial to users who work with diversified applications that requires frequent system configuration. The KVM daisy chain feature of the Phoenix Blade Server helps system configuration, software installation, and update by allowing several chassis that are linked together to share access to the KVM. Additionally, it is much more helpful for working with graphic-interfaced OS that need to operate with dialogue boxes.

Phoenix Blade Server 318 Series

PBS 318 Front View

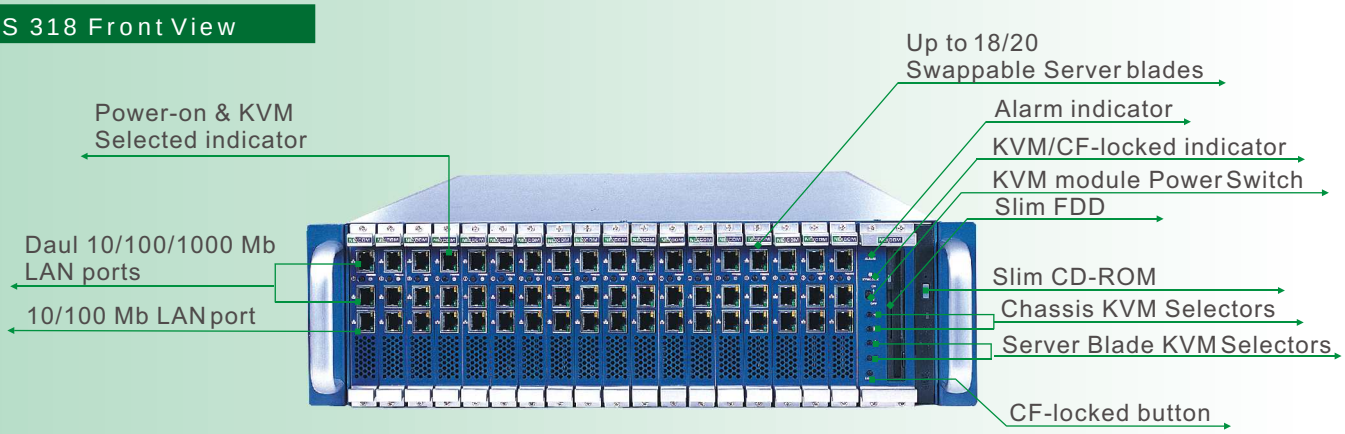

PBS 318 Rear View

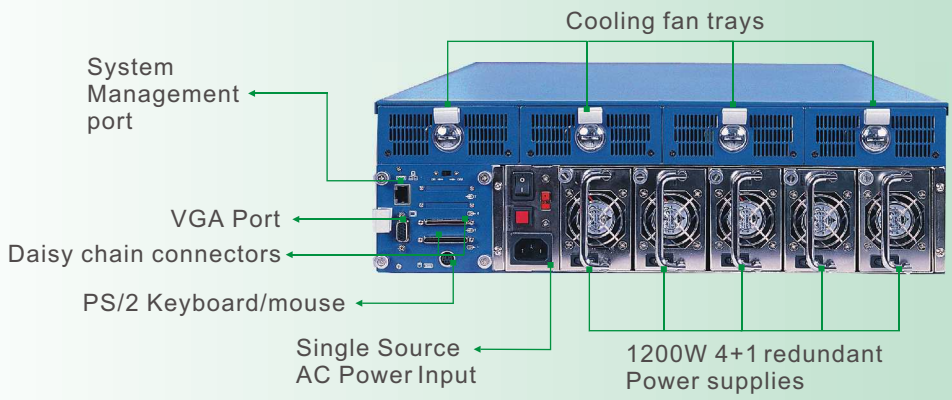

Adaptive and Scalable System Configuration

The server blades of PBS 318 include in-built DRAM and Intel's standard CPU sockets, which gives users the room to upgrade the intrinsic CPU performance instead of just escalating number of servers. This unique design makes the system more adaptive in system configuration, and superior to others. Unlike other blade server products that are limited by "Density", the innovation of PBS 318 offers a unique expansibility which opens up a whole new world of server-based applications. The PBS 318 server blades are the only products in the world that offers expansibility. Server blades with 32/64-bit I/O expansion slots accomodate additional high performance SCSI HBA, FC HBA, MPEG card, plus lots of others to fulfill functions for various applications.

Lower Total Cost of Ownership

Phoenix Blade Server 318 saves users' investment on many fronts. The most obvious one is its compact design that gives room for 18 server blades within only a 3U height, which helps to reduce the investment in floor space significantly. The Phoenix Blade Server 318 is also very efficient on power requirements - each blade consumes less than 50 watts; as a result, the Phoenix Blade Server cuts operating costs in energy consumption and air conditioning. As a result of its uniquely innovative designs, the Phoenix Blade Server 318 brings cost benefits, not only in lower initial investment, but owners will also minimise their ongoing maintenance costs. Down-time losses are also minimised by the combination of its unique KVM and CF sharing features and KVM daisy chain architecture, as well as its modular, backup, and hot-swap design.

Phoenix Blade Server 318 Series

Those features allow users to perform system configuration, software installation and maintenance on any server blades with less effort, both at local and remote sites. Just by clicking the chassis or blade icon, users can remotely monitor all field service units and execute Start/Stop/ Restart to any server blades. Even when replacing failed components, all you have to do is "pull and plug". Therefore the operator of a Phoenix Blade Server system can always take action to recover the system with minimum delay.
Another advantage is the simplified cabling, where only 18 cords are used with 250 servers within a 42U rack. That means no more tangled cables to trouble the system administrator and a much higher number of servers can be managed by one person, in contrast to traditional 1U slim server.

A Reliable Platform

Your servers have to keep running 24 hours a day, 7 days a week, 365 days a year. There can be no compromise.

But reliability does not always originate from brand names. Instead, in reality, it comes from the superiority of system architecture. PBS 318 has taken many issues into consideration. It was created with the stringent design criteria of industrial computers. For securing the system from failed power modules, additional power units serve as backup. All major parts are designed as hot-swap units. This feature is not just convenient for maintenance, but it also reduces the system's potential points of failure, and so it increases system reliability. In developing the product, a lot of effort has been devoted to the achievement of excellent thermal efficiency, and the product has passed high temperature chamber tests. The technology has been well proven by its use in various industries. Phoenix Blade Server 318 represents a paradigm shift of server technology, with new levels of server blade density, flexibility, expansibility, low power requirements and high reliability.

Rack Optimized Configuration

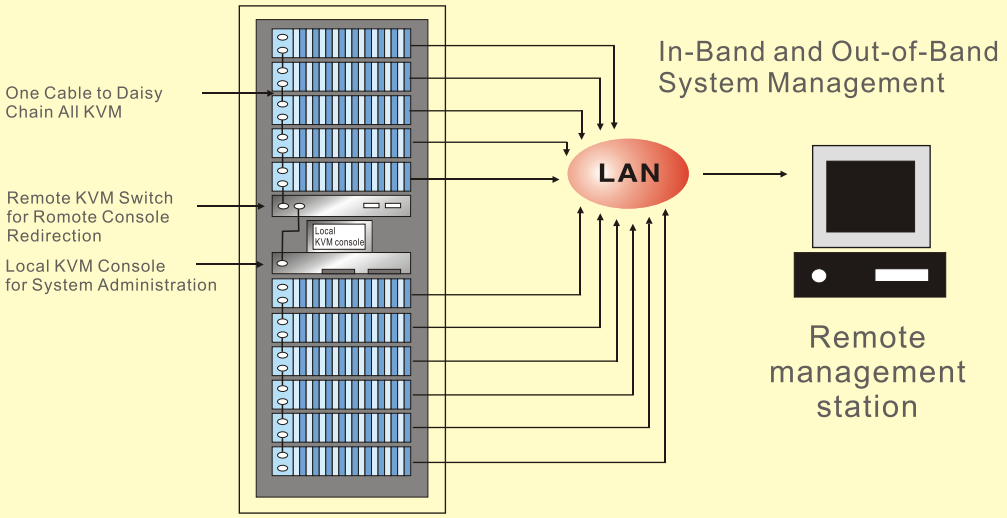

Phoenix Blade Server 318 Series

Advantages

	Reliability	Availability	Scalability	Manageability	Serviceability	Cost Saving
Ultra high dense			✓	✓	✓	✓
Hot swappable server blade		✓			✓	
Hot swappable power supply		✓			✓	
Hot swappable system fan		✓			✓	
Shared KVM				✓	✓	✓
Shared CD-ROM/FDD					✓	
KVM daisy chain			✓	✓	✓	✓
Remote management				✓	✓	✓
Health monitor	✓			✓		
Various server blades			✓			✓
Expansion slot			✓			
Selectable socket370 type CPU			✓		✓	✓
Expandable SDRAM w/DIMM socket			✓		✓	✓
Industrial grade design	✓					
Redundant power supply	✓					

Specifications

Phoenix Blade Server 318 Chassis

Model	PBS 318-DC-SM
Chassis	3U height,19"rackmount chassis
	18/20 server blade slots
Server Blade	HDB 31650/HDB 31670
KVM & Daisy Chain	1.Swappable KVM front and rear modules 2.Support KVM daisy chain for chaining up to 14 chassis 3.Support remote switch function
CD-ROM/FDD	Built-in slim 3.5"FDD and CD-ROM
System Fan Tray	4 hot swappable fan trays
Power Supply	1200W 4+1 redundant power supply
Dimensions	427.40(W)x132.6(H)X672.25(D)mm
System Management	Built-in system management function

Phoenix Blade Server 318 Series

Specifications

Phoenix Blade Server 318 Server Blades

Model	HDB31650	HDB31670
Server Blade		
CPU	Socket 370 for Intel FC-PGA2 : Pentium® III (Tualatin)1.13GHz Celeron 1.2GHz VIA C3 800MHz	Socket 370 for Intel FC-PGA2 : Pentium® III (Tualatin)1.13GHz Celeron 1.2GHz
Chipset	Intel 815E	ServerWorks LC-T
Memory	DIMM Socket x 1, SDRAM up to 512MB	DIMM Socket x 1, SDRAM w/ECC & register up to 1GB
LAN	Intel 82559 10/100 Mb Ethernet chip x 3	Broadcom 5701 10/100/1000Mb Ethernet chip x 2 +Intel 82559 10/100 Mb Ethernet chip x1
HDD	Support 2.5" IDE HDD x 1	Support 2.5" IDE HDD x 1
Expansion	N/A	64-bit PCI expansion slot, occupied 2-solt width
OS	Windows NT4.0/2000, Red Hat, SCO Unix	
Optional Item	N/A	64-bit PCI riser card

PHOENIX DATACOM

Phoenix Datacom Limited
Phoenix House, Smeaton Close
Rabans Lane, Aylesbury, Bucks HP19 8UW
tel: +44 (0)1296 397711
fax: +44 (0) 1296 394431
email: info@phoenixdatacom.com
web: www.phoenixdatacom.com

Manufactured for Phoenix Datacom by NexCom

NEXCOM®

Intel® Applied Computing Platform Provider

ISO 9001 Certified Firm

2002-06